Speaker stand

STT-6 A Truss 300mm/50mm/3mm

Dimension: 6M

Loading: 600kg Max

STT-8 A Truss 400mm/50mm/3mm

Dimension: 8M

Loading: 800kg Max

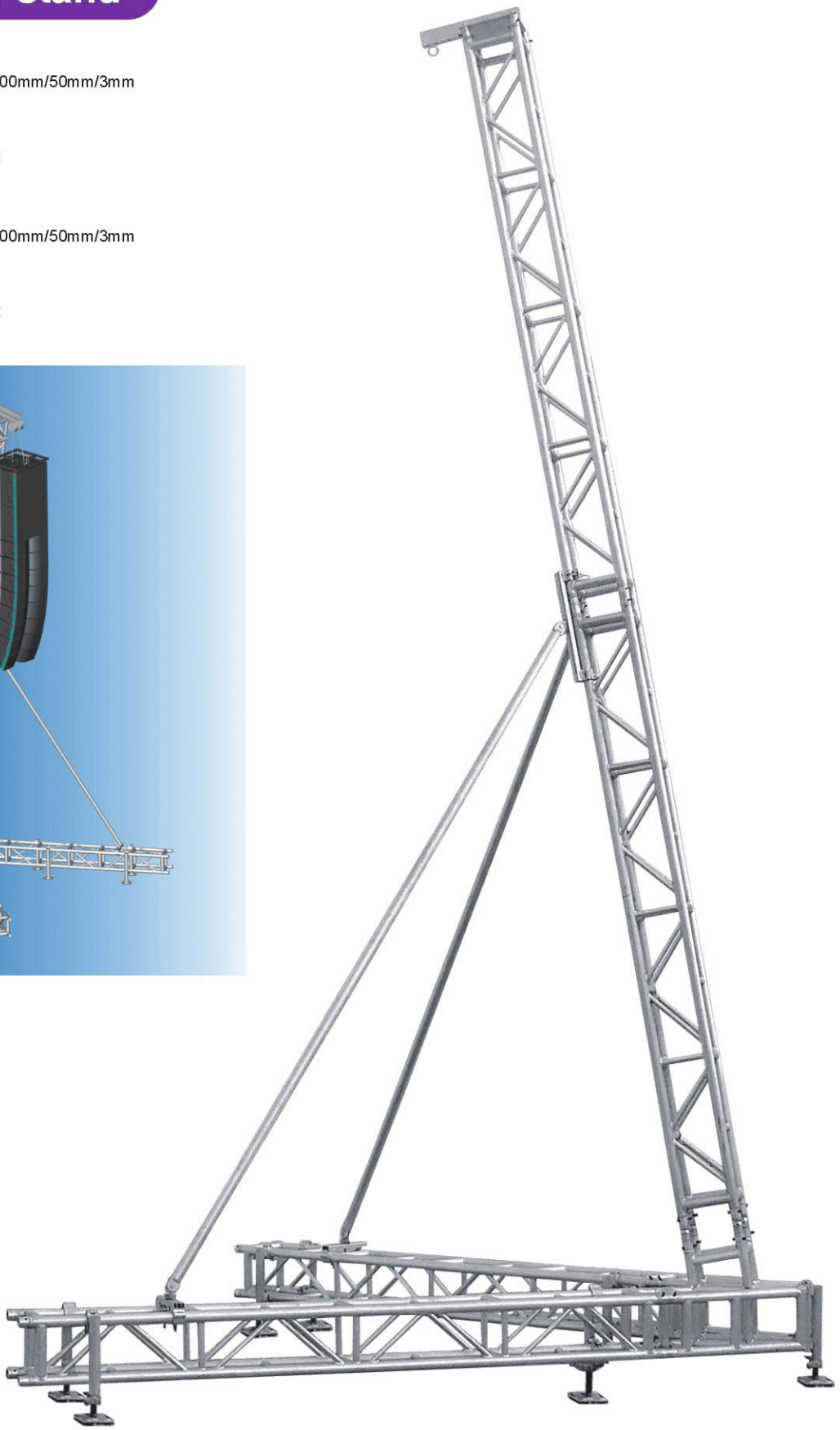

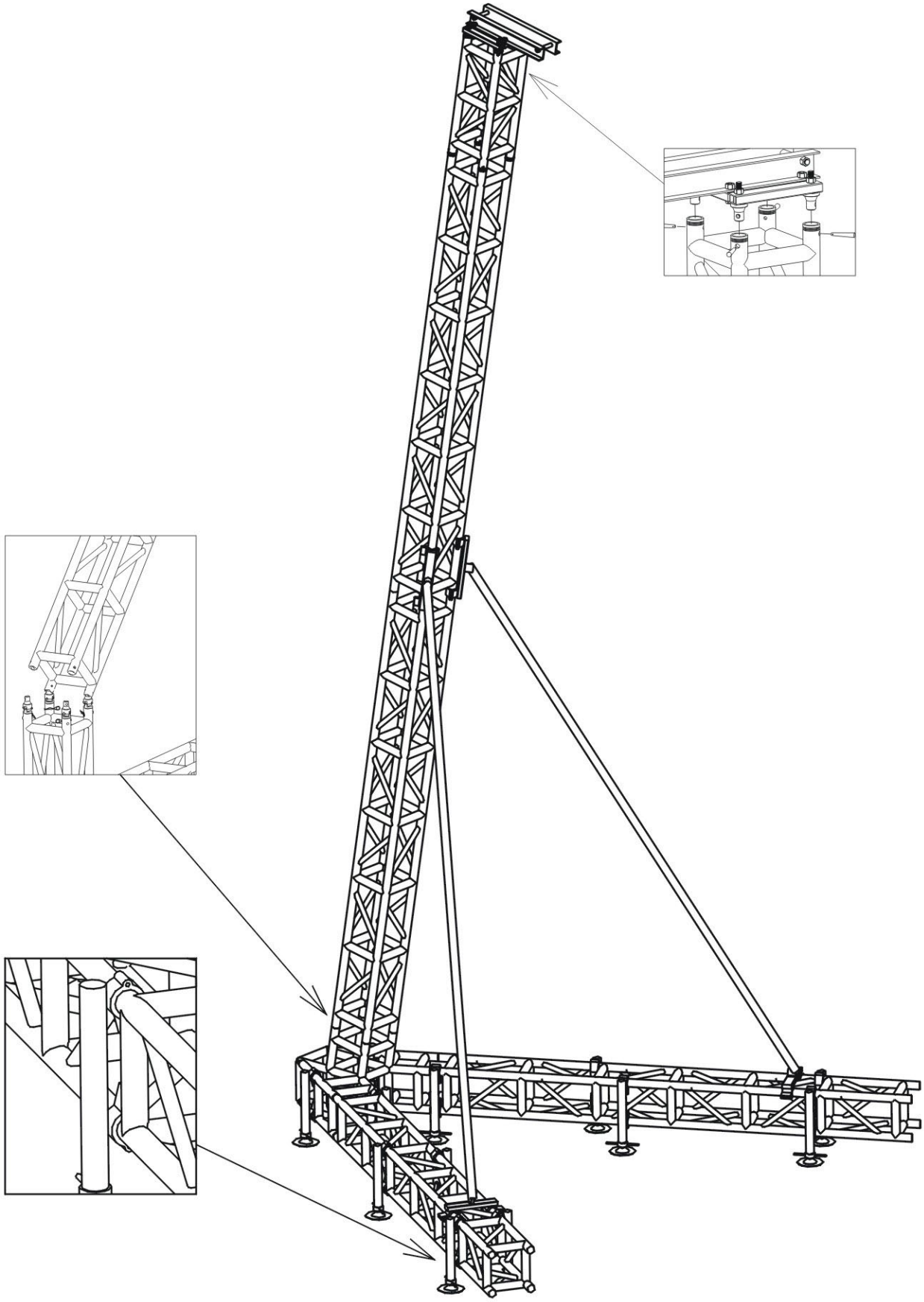

LS-300

Line Array Stand 300mm/50mm/3mm

Dimension: 6M

Max Loading: 600kg

LS-400

Line Array Stand 400mm/50mm/3mm

Dimension: 6M

Max Loading: 1000kg

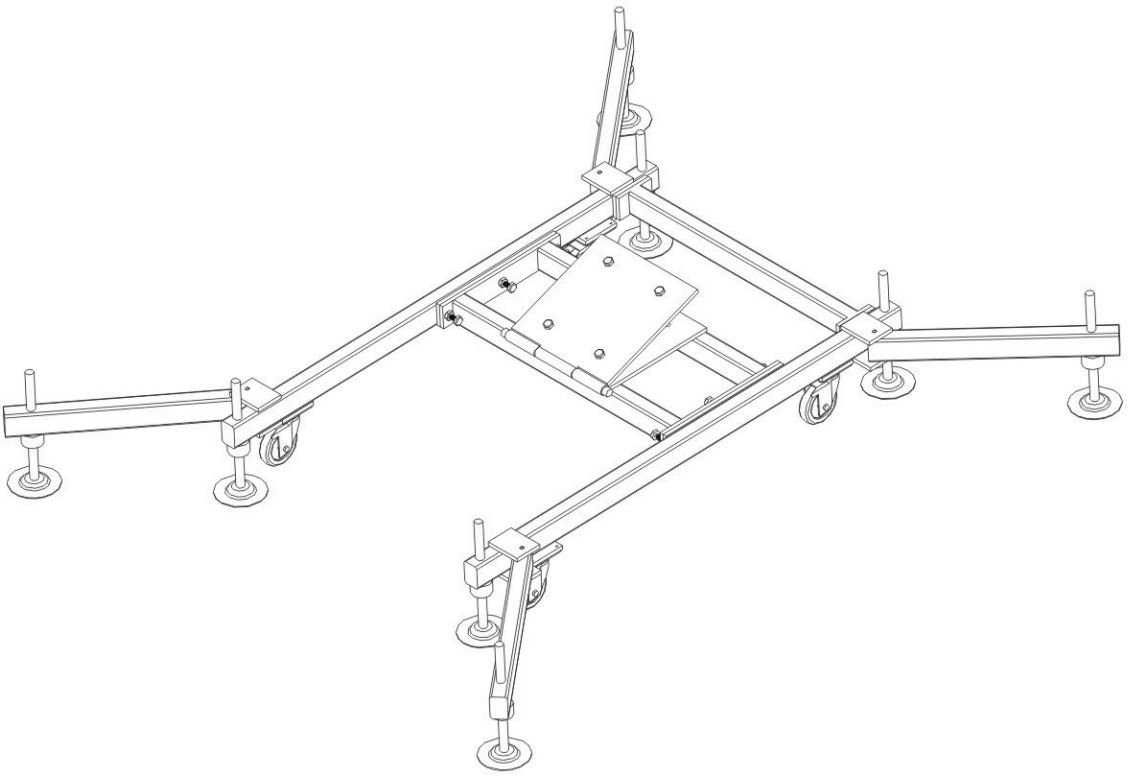

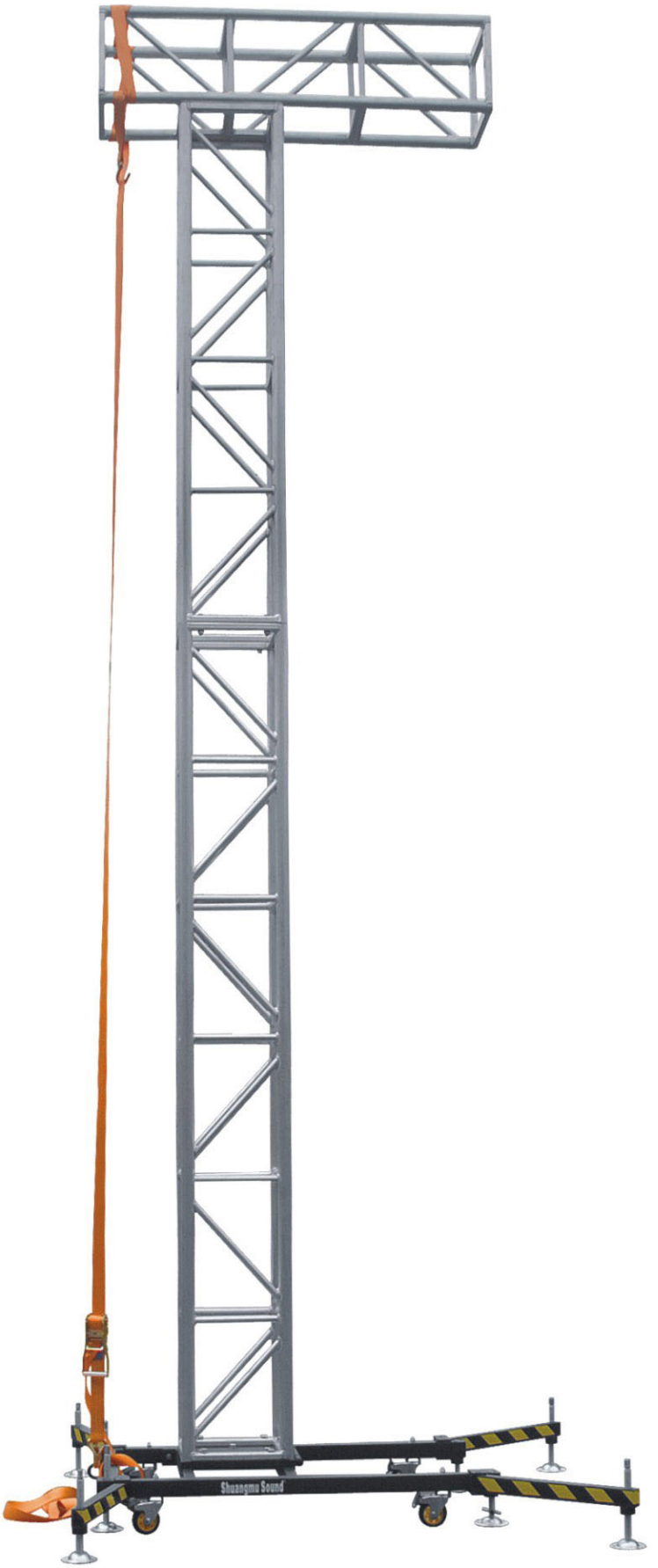
Shuangma Sound

ESS-6

Electric Speaker Stand

Dimension: 6M

Loading: 1000kg (Max)

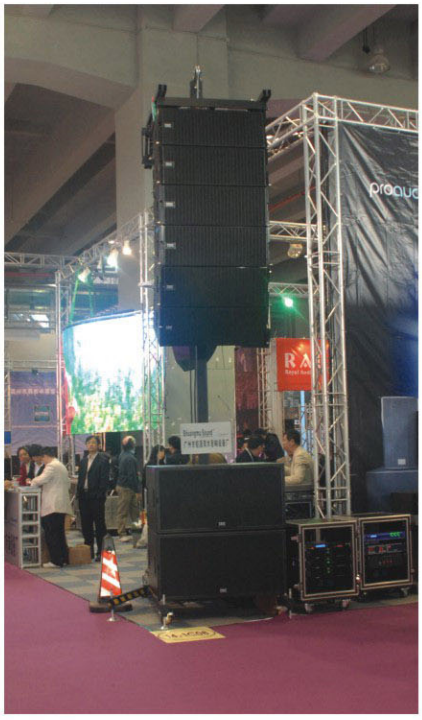

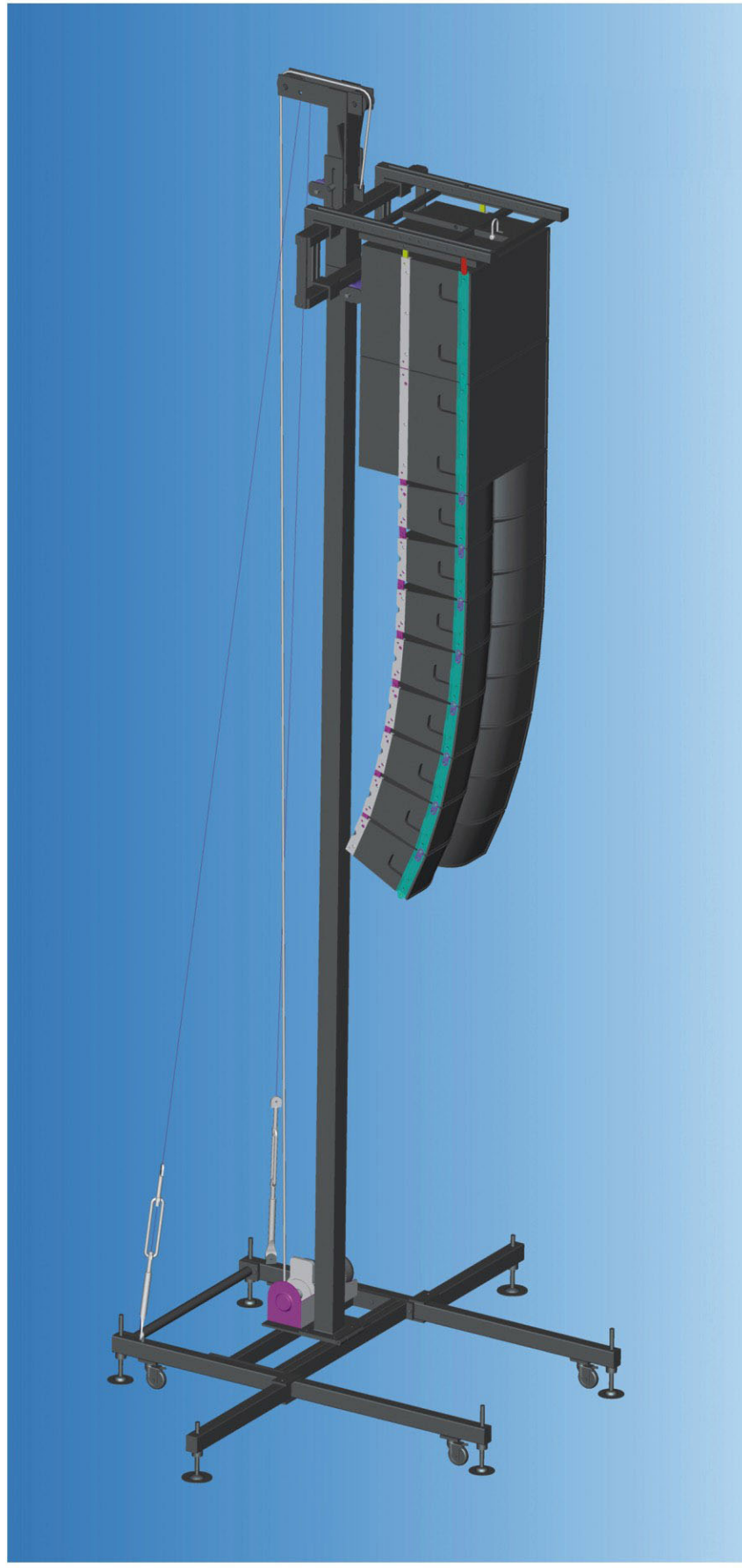

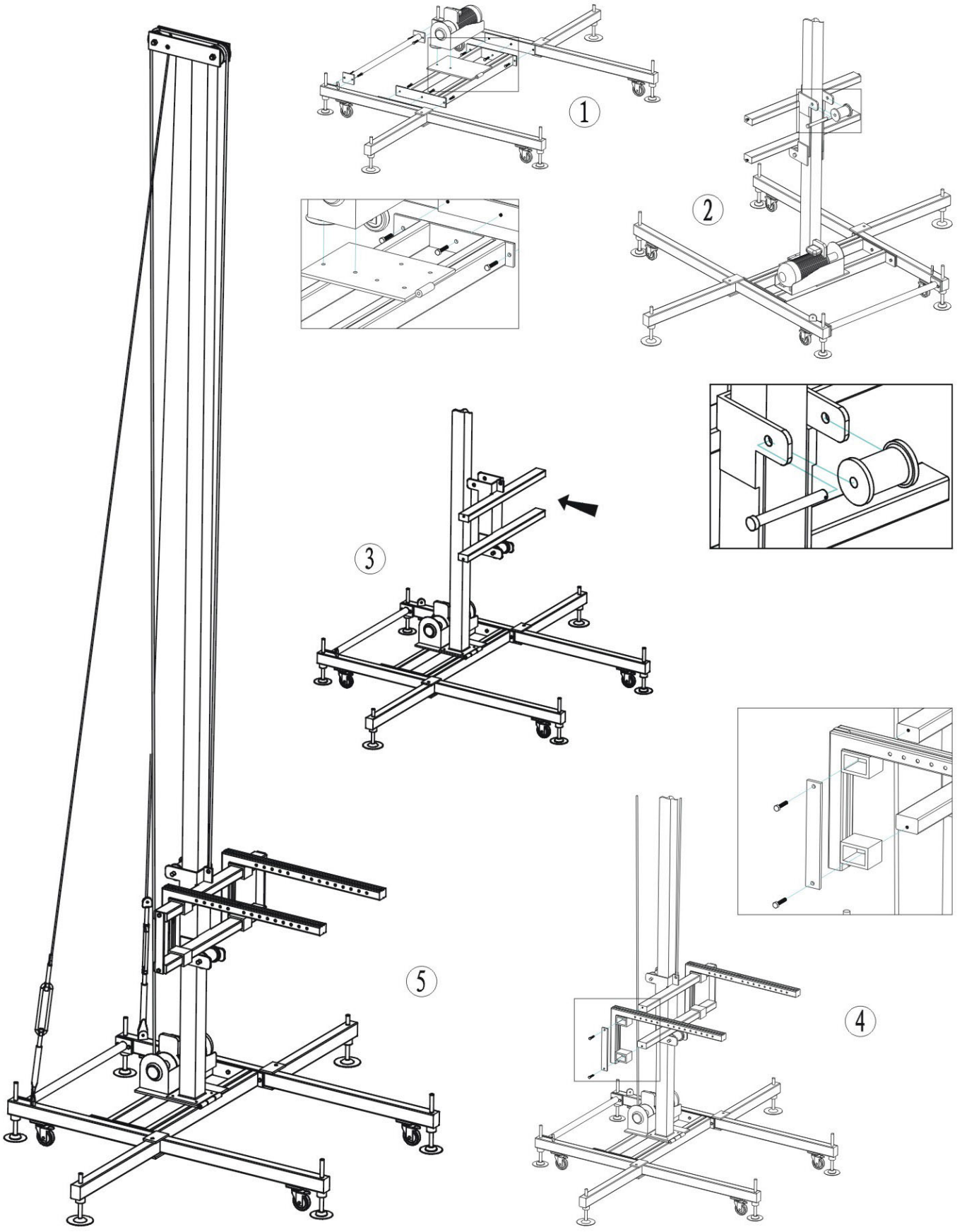
1
2
3
4
5

SWT-6

2 Towers Line Array Truss
300mm/50mm/3mm

Dimensions: 2M x 6M
3M x 6M

SWT-9

2 Towers Line Array Truss
300mm/50mm/3mm

Dimensions: 2M x 9M
3M x 9M

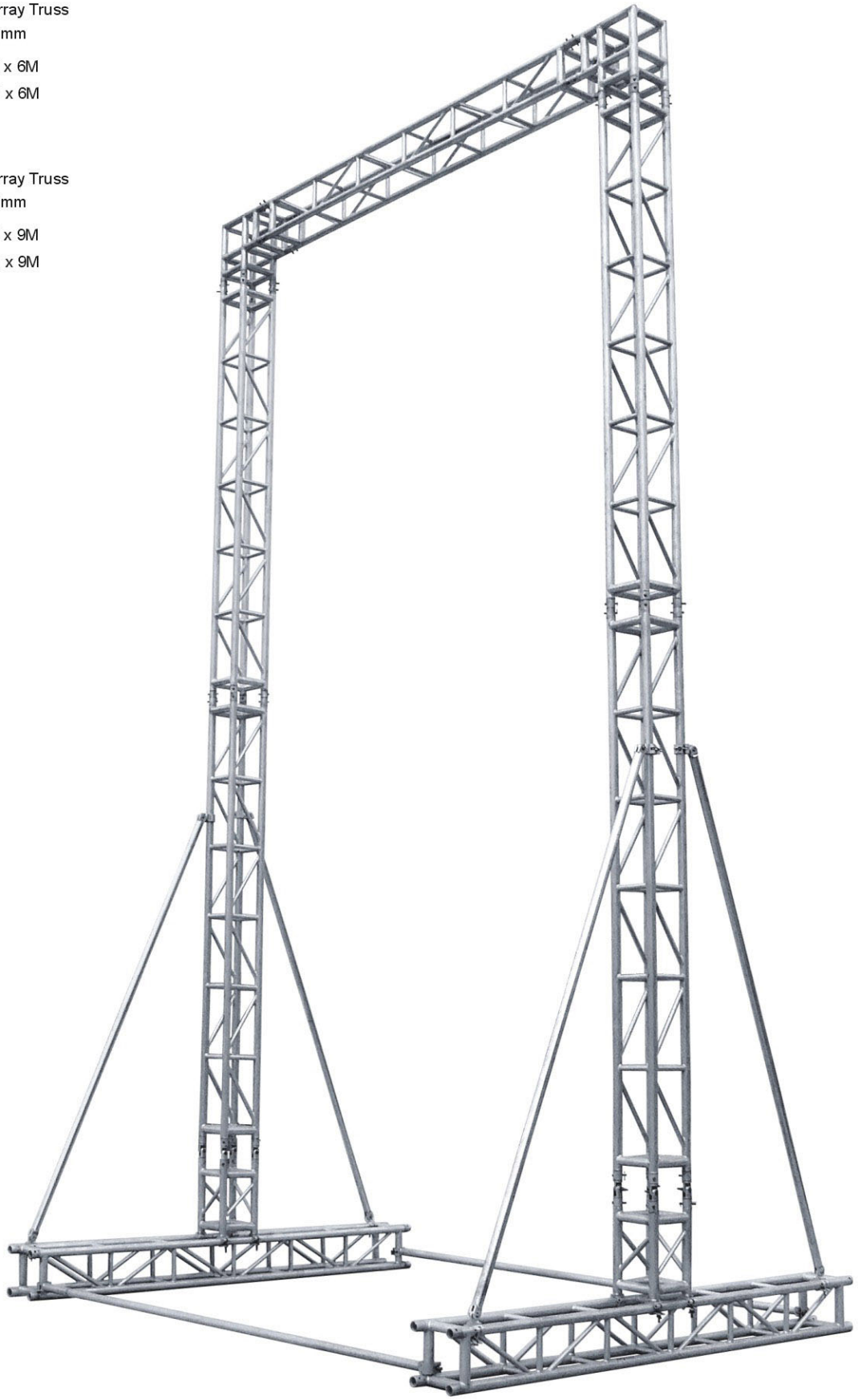

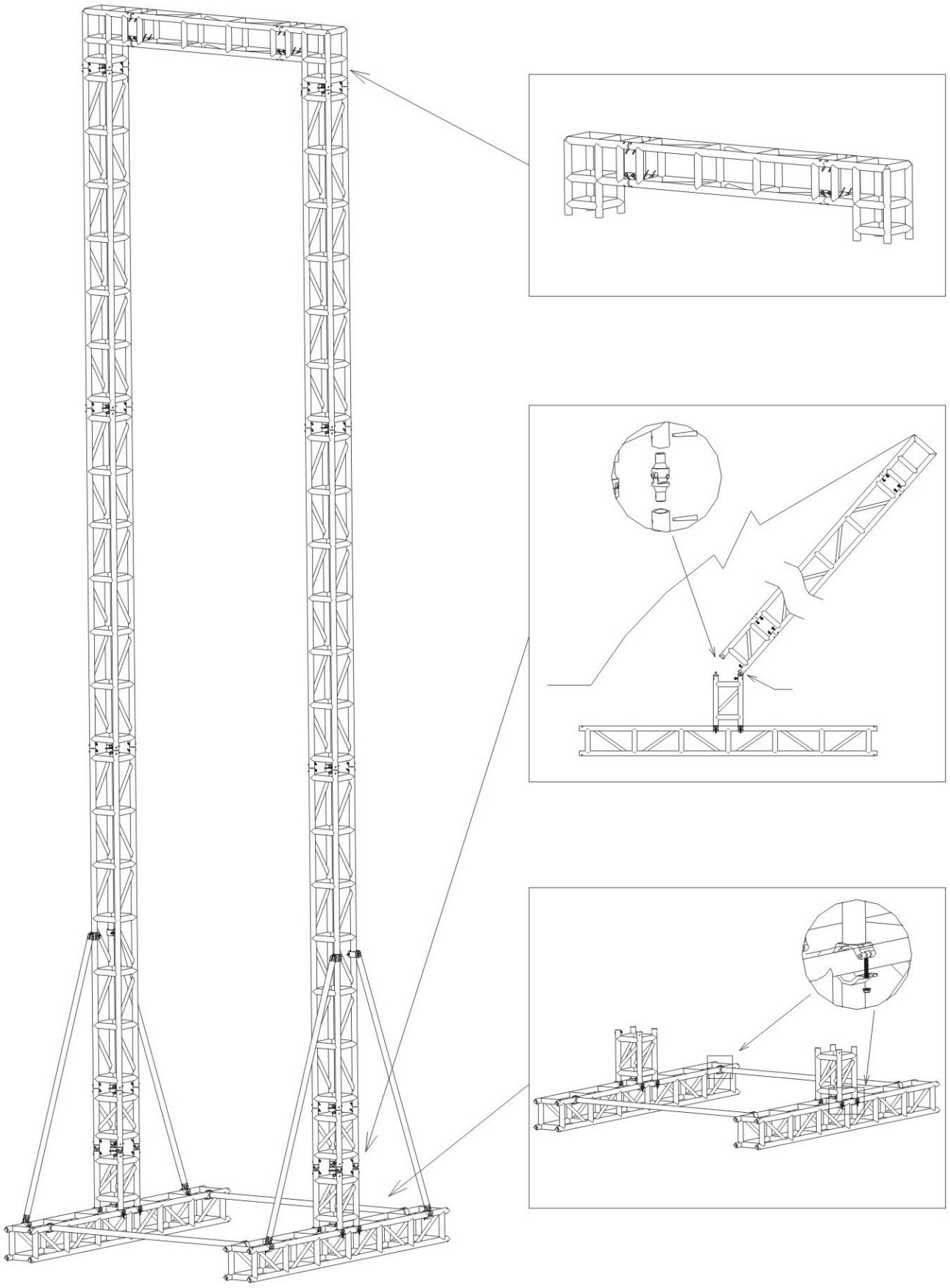

SWT-6A

2 Towers Line Array Truss
300mm/50mm/3mm

Dimension: 2M x 6M
3M x 6M

SWT-9A

2 Towers Line Array Truss
300mm/50mm/3mm

Dimensions: 2M x 9M
3M x 9M

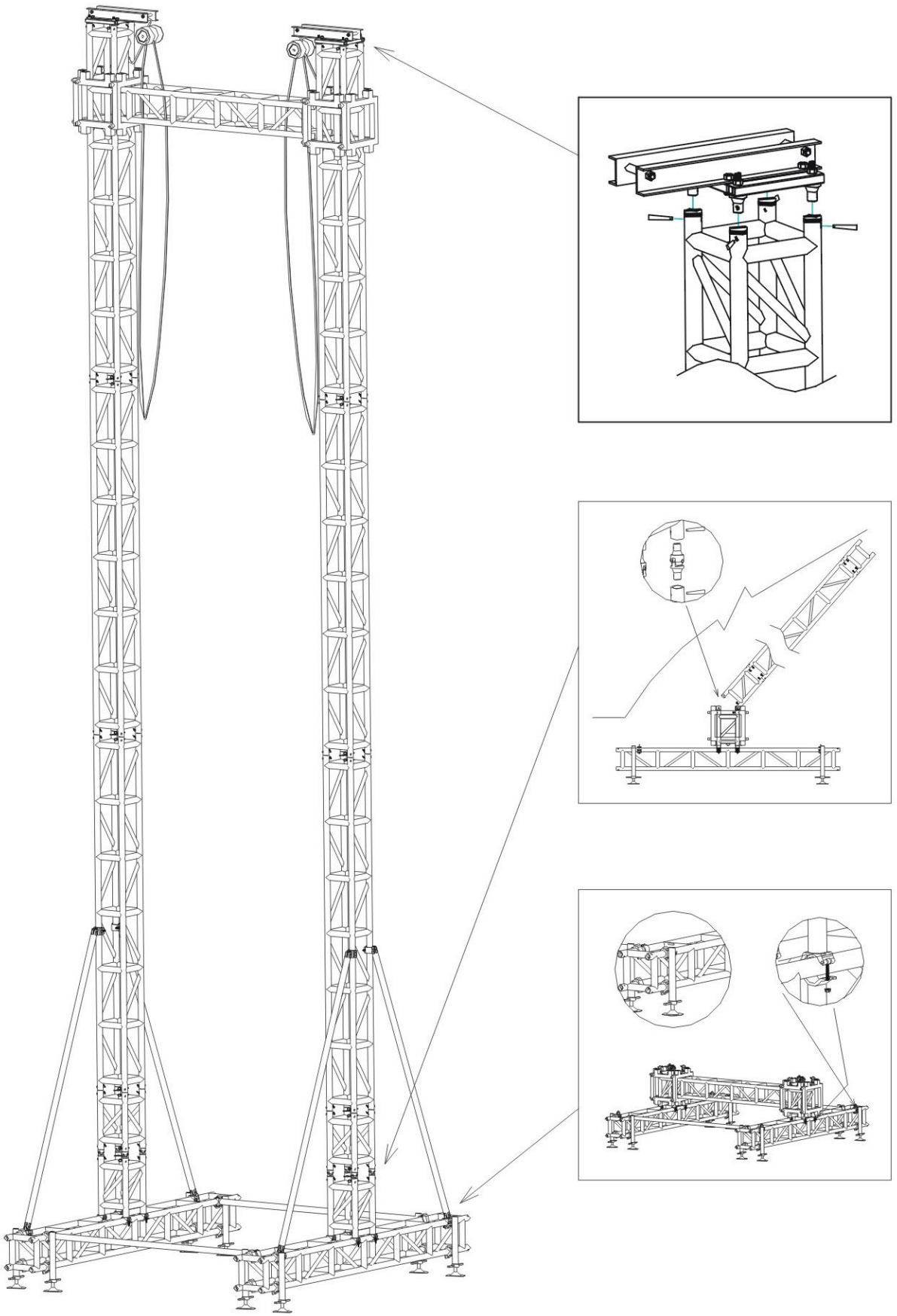

LT-6

Layer Truss (Steel) 48mm/3mm

Dimension: 2M x 2M x 6M

2M x 3M x 6M

LT-8

Layer Truss (Steel) 48mm/3mm

Dimension: 2M x 2M x 8M

2M x 3M x 8M

LT-10

Layer Truss (Steel) 48mm/3mm

Dimension: 2M x 2M x 10M

2M x 3M x 10M

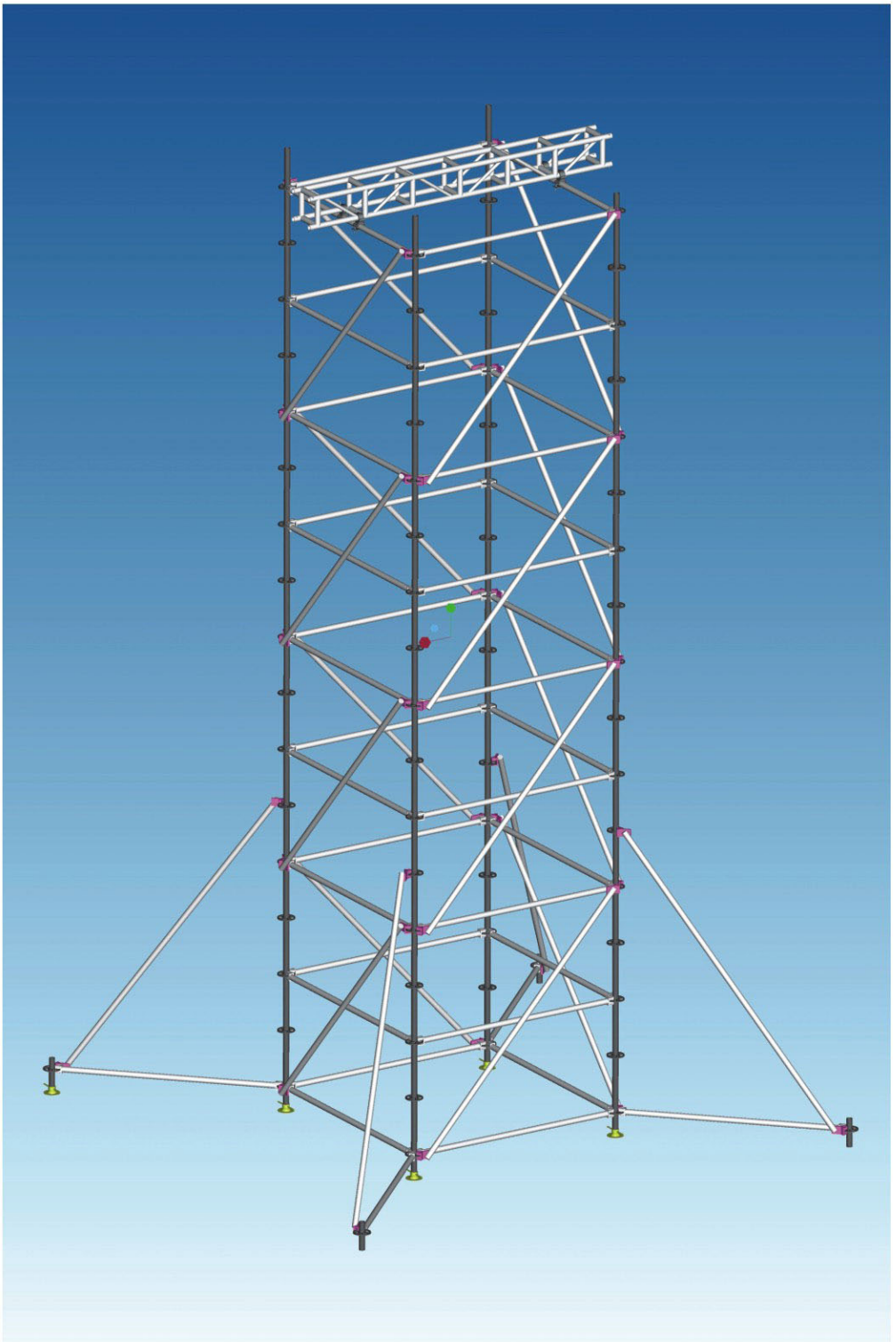

DJ Truss

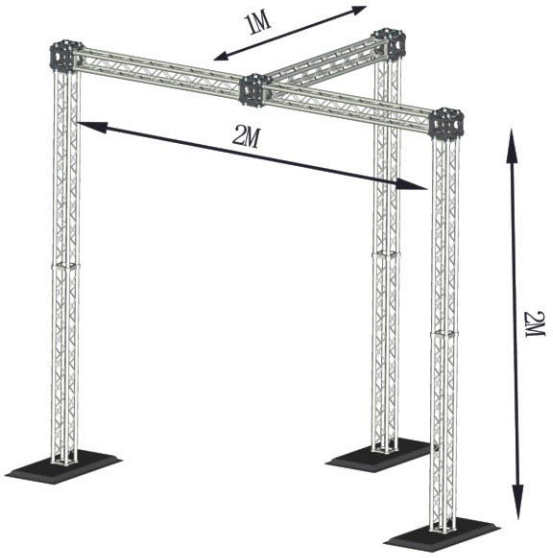

DJ-1

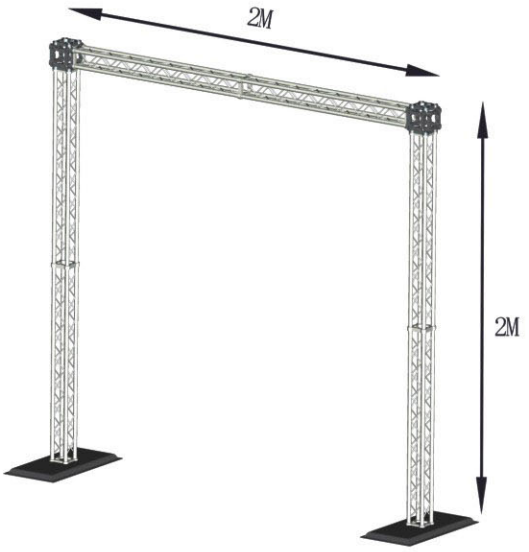

DJ-2

DJ-3

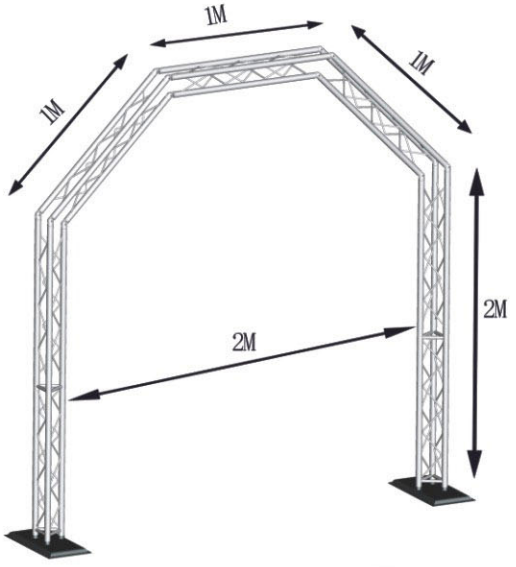

DJ-4

Layer Truss

Cérémonie d'ouverture des compétitions de voile des Jeux de la XXIXe Olympiade
The Launching Ceremony of the Games of the XXIX Olympiad Sailing Competition
第29届奥林匹克运动会帆船比赛启动仪式

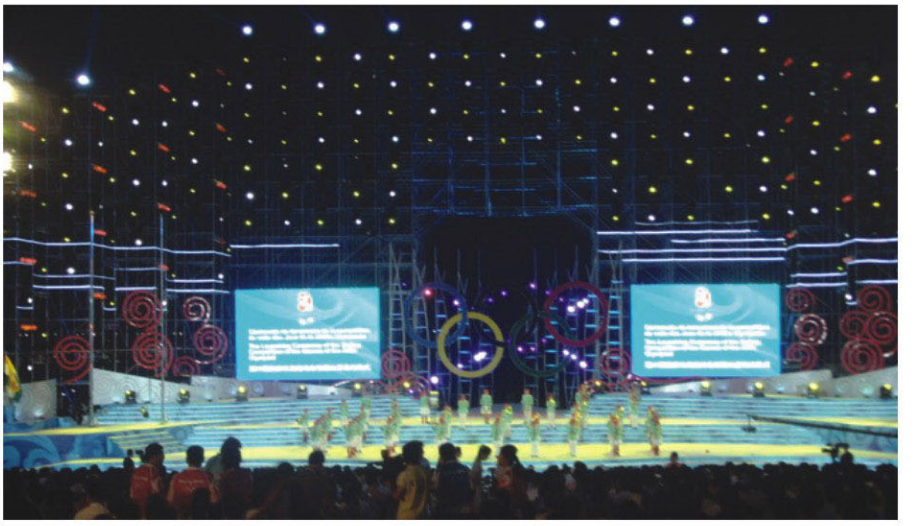

Working Frame

WF-600
Working Frame 50 x 3mm

Dimension: 1.5M x 2M x 6M

WF-800
Working Frame 50 x 3mm

Dimension: 1.5M x 2M x 8M

WF-1000
Working Frame 50 x 3mm

Dimension: 1.5M x 2M x 10M

Table & chair

TB-1

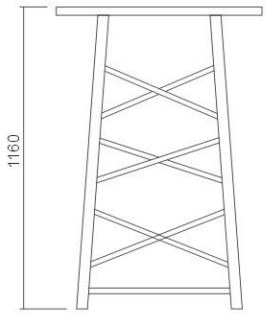

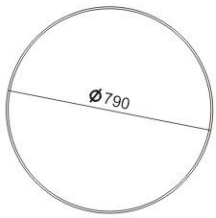

TB-2

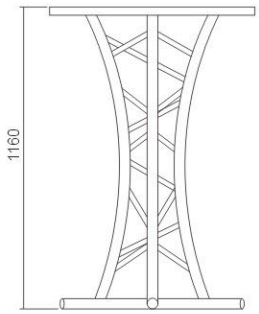

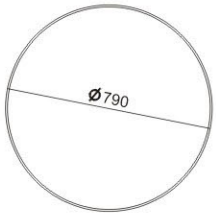

CS-1

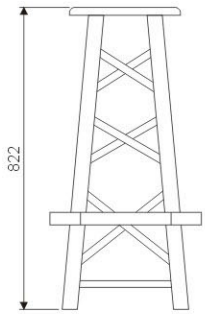

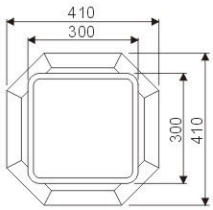

CS-2

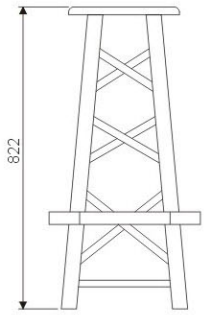

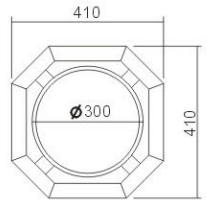

Model 1

Tent Room

TR-5
Dimension: 5M x 5M x 2.5M

TR-3
Dimension: 3M x 3M x 2.5M

TR-6
Dimension: 6M x 6M x 2.5M

TR-4-6
Dimension: 4M x 6M x 2.5M

TR-3-5
Dimension: 3M x 5M x 2.5M

Base Section

Corner Section

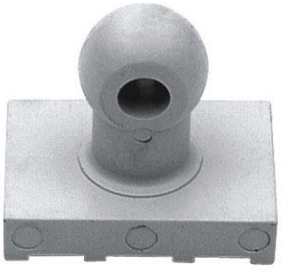

Curtain Section

Inside Corner Section

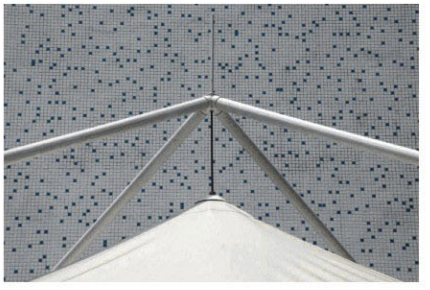

Top Section

Setting Bar

BR-1 Barrier Without Table (White&Black)

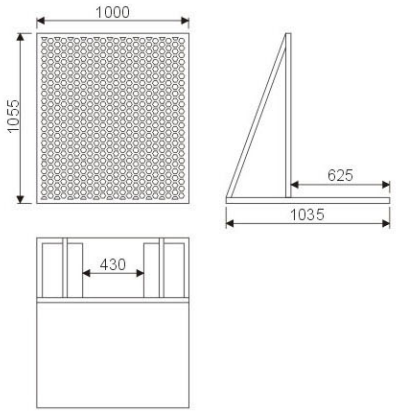

BR-2 Barrier With Table (White&Black)

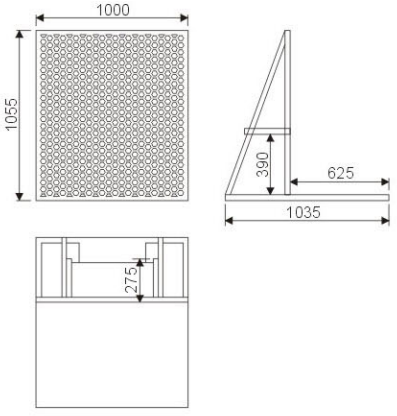

BR-3 Barrier With Door (White&Black)

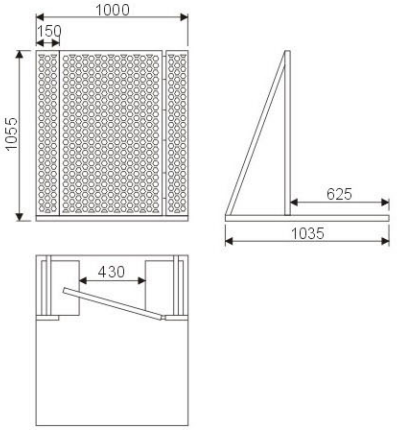

BR-4 Barrier With Table (White&Black)

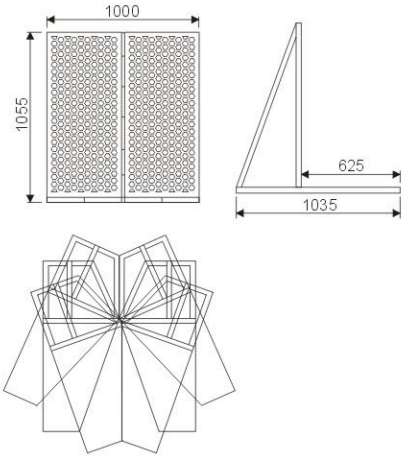

BR-5 Barrier With Cable Cover (White & Black)

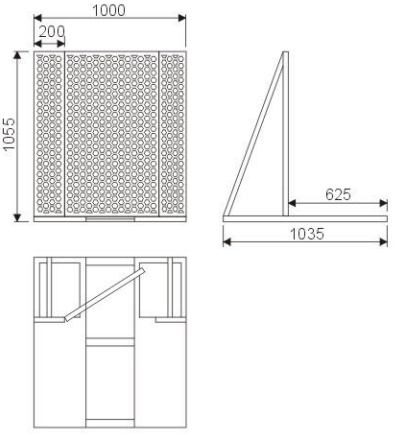

BT-1 Barrier Truck 13pcs In One

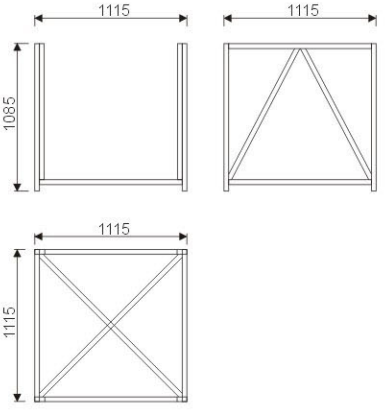

Cable Cover

CB-5 Cable Cover 5 Ways Loading: 10 Ton

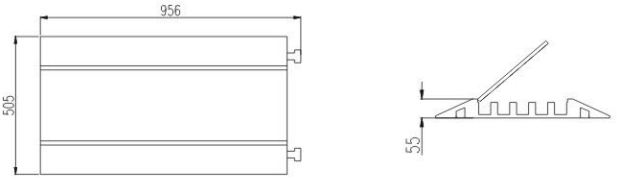

CB-5C Cable Cover Corner 5 ways

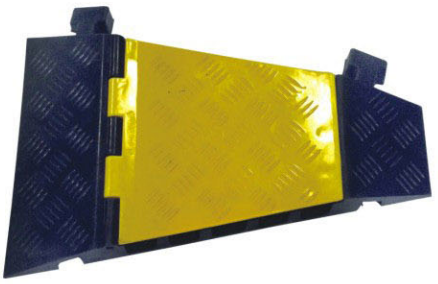

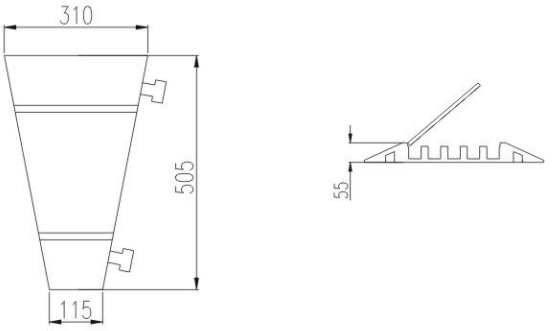

CB-2 Cable Cover 2 Way Loading L: 10 Ton

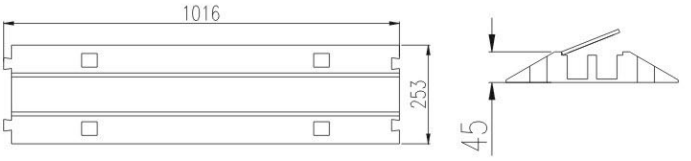

CB-2C Cable Cover Corner 2 Way

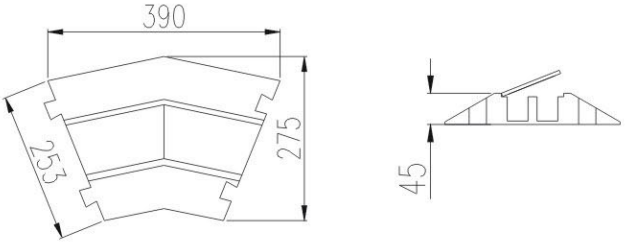

Model 1

Model 2